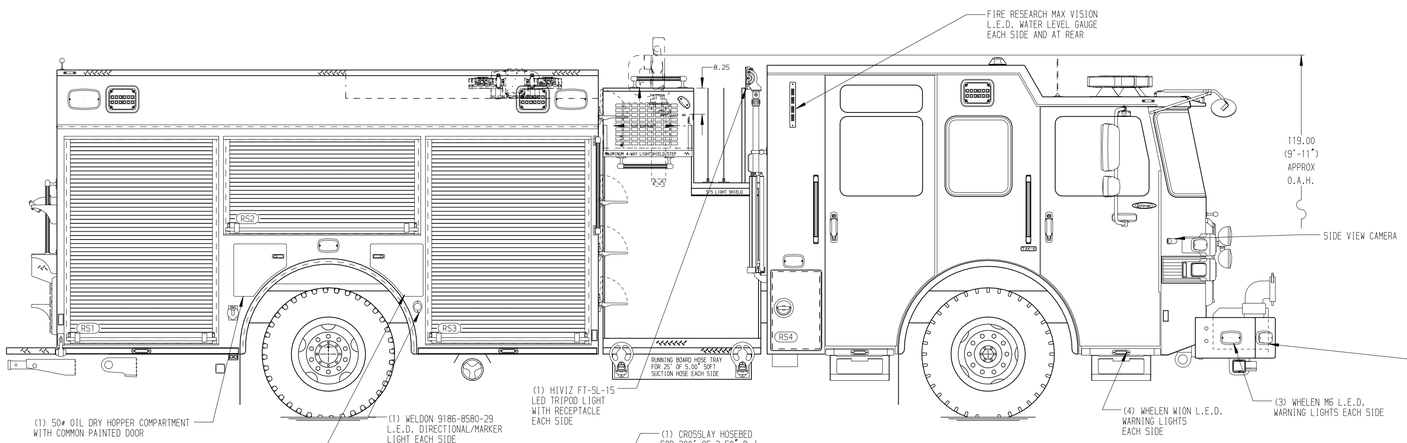

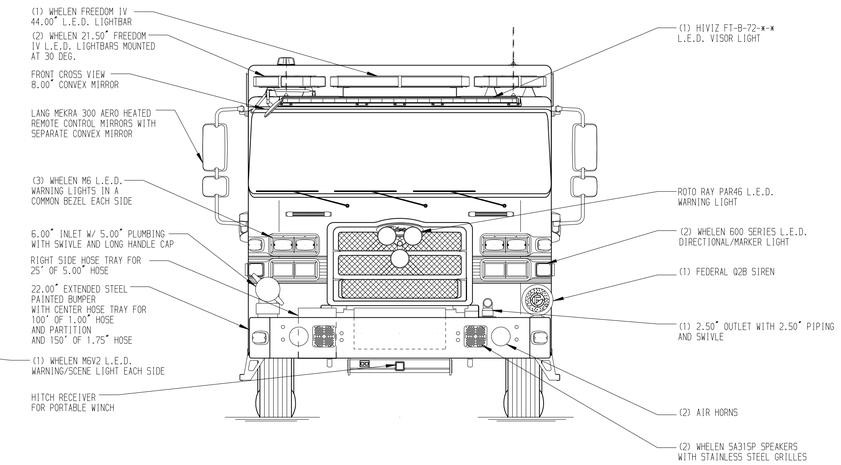

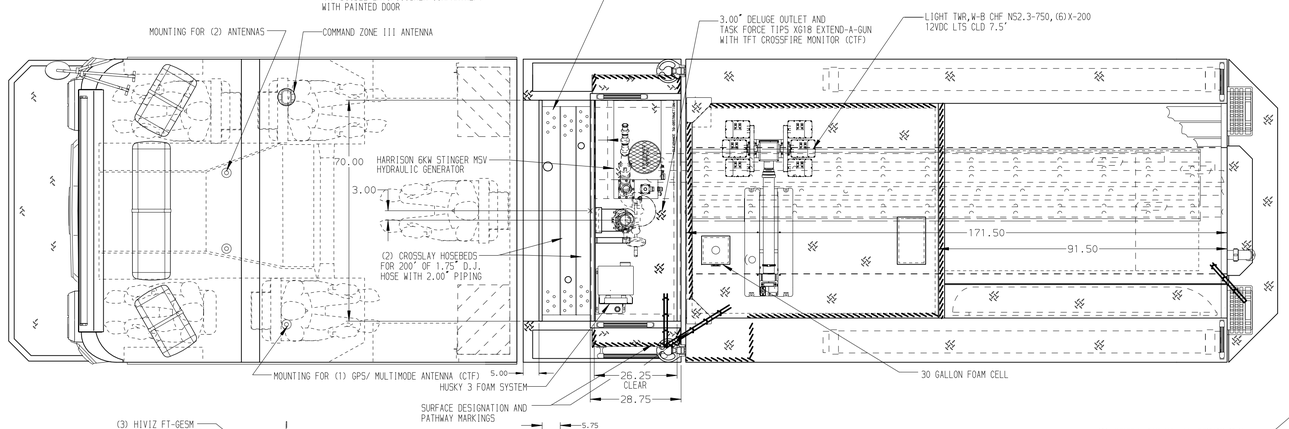

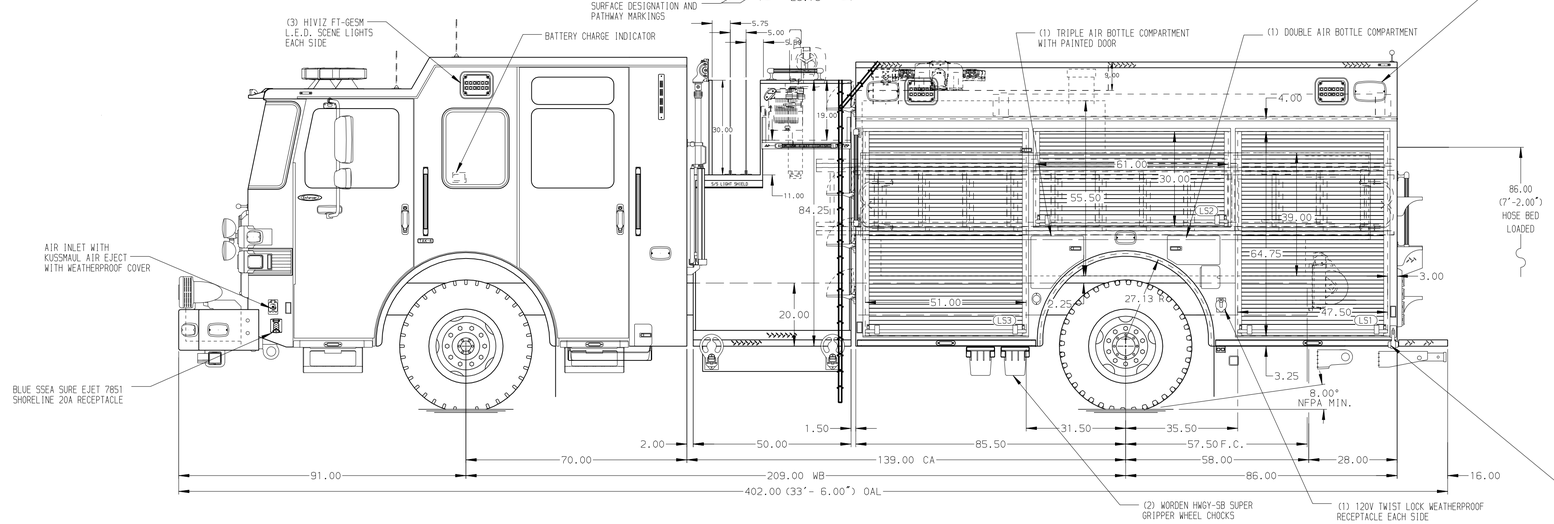

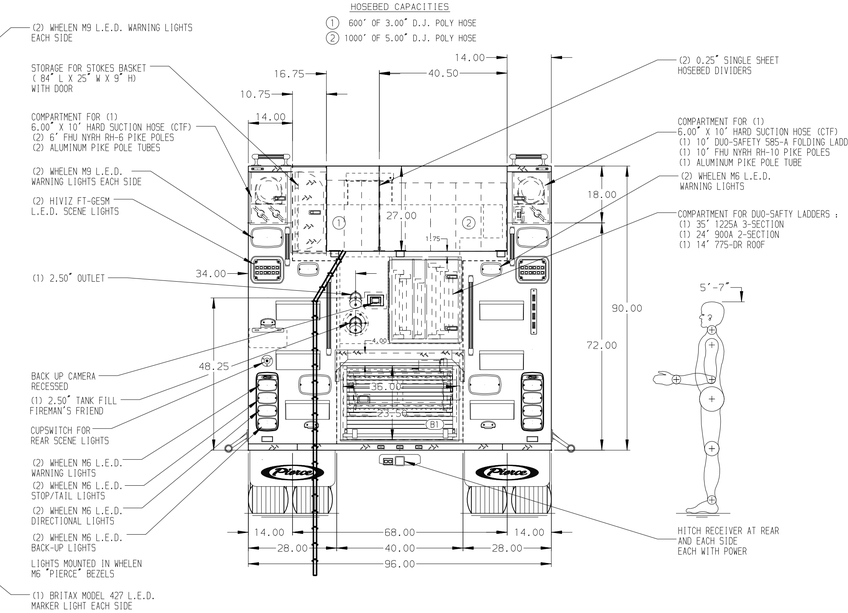

ALUMINUM BODY

SIDE ROLL AND FRONTAL IMPACT PROTECTION

NOTE

DIMENSIONS SHOWN ARE APPROXIMATE AND ARE SUBJECT TO MINOR DEVIATIONS AS MAY OCCUR OR BE NECESSARY IN CONSTRUCTION.
MINOR DETAILS NOT SHOWN.

1. ONSPOT AUTOMATIC TIRE CHAINS TO BE PROVIDED AT REAR
2. AIR OUTLET WITH SHUT OFF VALVE ON THE DRIVER'S SIDE PUMP PANEL
3. PACCAR DEF TANK MOUNTED UNDER CAB ON THE DRIVER'S SIDE
4. KUSSMAUL BATTERY CHARGER LOCATED IN THE CAB PER SHOP ORDER
5. TWO 120V NEMA DUPLEX RECEPTACLES LOCATED IN THE CAB PER SHOP ORDER

REV	DATE	BY	CH
V	19JAN24	KLE	-
B	17JAN24	KLE	CSH
V	15JAN24	KLE	CSH

CHASSIS DATA
MAKE: PIERCE
MODEL: ENFORCER

Pierce MANUFACTURING INC.

TITLE: 1500-D-750P, 720G WATER, 30G FOAM 171" FH FD W/ NOTCH LADDERS THRU TANK, (3) CROSSLAYS, DELUGE, GENERATOR
FOR: LAGRANGE FIRE & RESCUE DEPARTMENT, LAGRANGE, KENTUCKY
DWG NO.: 38387AD-SH1

JOB NO.	38387
SCALE	1:24
DATE	
DRAWN BY	LST 09OCT23
CHECKED BY	CDU 10OCT23
SHEET SIZE	D
SHEET NO.	1 OF 2